International Journal of Applied Operational Research
Vol. 8, No. 1, pp. 33-45, Winter 2018

Journal homepage: ijorlu.liau.ac.ir

A super-efficiency DEA model for ranking production units with network structure

R. Azizi, R. Kazemi Matin*

Received: 5 August 2017 **;** **Accepted:** 12 December 2017

Abstract Data envelopment analysis is a non-parametric approach for evaluating efficiency score of peer decision making units which consume multiple inputs to produce multiple outputs. The conventional data envelopment analysis models consider decision making units as black-boxes by ignoring internal sub-processes of the production units, while network-data envelopment analysis models have been proposed for determining the efficiency score of network systems. The current paper develops a network-data envelopment analysis super efficiency model to rank and compare the performance of network systems. The proposed general network super-efficiency model can be used for ranking multi-stage production units. The new approach is then applied for evaluating wheat productions in Iran provinces. Traditional models are used as well as the new network data envelopment analysis model to calculate a set of super-efficiency scores for provinces under the investigation. The research extends the application of data envelopment analysis method to judgment and decision making in wheat farming as a network production process.

Keyword: Data Envelopment Analysis, Network DEA, Super Efficiency, Wheat Production.

1 Introduction

Data envelopment analysis (DEA) is a non-parametric approach for evaluating efficiency score of peer decision making units (DMUs) which consume multiple inputs to produce multiple outputs. Non-parametric approaches assume no specific form for production function and as the result, measuring efficiency scores is based on an estimated production frontier using observed inputs and outputs data. Following the pioneering work of Farrell (1957) [1], DEA as a non-parametric technique is introduced for evaluating efficiency scores of units in constant returns to scale (CRS) technology (Charnes et al., 1978) [2]. Another model for measuring the efficiency score of systems under variable returns to scale (VRS) technology was introduced by Banker et al. (Banker et al., 1984) [3]. Recent citation based studies indicate that the DEA has a significant growth in many application areas which is accompanied by new theoretical developments, see for example [4, 5] (Emrouznejad et al., 2008; Cook and Seiford, 2009) among the others.

* **Corresponding Author. (✉)**
E-mail: rkmatin@kiau.ac.ir (R. Kazemi Matin)

R. Azizi
Department of Mathematics, Islamic Azad University, Karaj Branch, Karaj, Iran

R. Kazemi Matin
Department of Mathematics, Islamic Azad University, Karaj Branch, Karaj, Iran

[Downloaded from mail.ijaor.ir on 2026-11-27]

In standard DEA models, a DMU is treated as a black-box which converts some inputs to some outputs and interrelationship between sub-processes are totally ignored. So, basic DEA models cannot use directly for performance evaluation of multi-stage production systems. To overcome this deficiency, network DEA models are introduced to deal with production systems with some sub-processes.

In recent years, many researchers studied the issue of modeling production units with network structures in DEA. A two-stage structure where the first stage consumes some inputs to produce some intermediate outputs which used to produce final outputs in the second stage was studied by (Zhu, 2000) [6]. The proposed model is then used to measure the efficiency of the best 500 companies as ranked by Fortune. Also a similar method to study the performance of Major Baseball League was used by (Lewis and Sexton, 2004) [7]. A relational model to measure the efficiency of a two-stage production unit in which the product of two-stage efficiencies is equal to the total system efficiency was developed by (Kao and Hwang, 2008) [8]. A model for two stage systems in which a second stage has exogenous inputs in addition to intermediate product was introduced by (Li et al., 2012) [9]. A model to evaluate network systems with parallel structure was presented in (Kao, 2009, b) [10]. The model of two stage systems for systems with more than two stages (series system) was generalized by (Kao, 2009, a) [11]. Also, a relational model for measuring the efficiency score of a production unit with general network structure has been provided. Although, this model is applicable for all network systems, it is not a unified model and the constraints of the model need to rearrange by any variation in the number of inputs, outputs and sub-processes was presented (Kao, 2009,a) [11]. A simple model for general network systems to derive cost efficiency and scale efficiency of the units was presented by (Lozano, 2011) [12]. Although Lozano's model is applicable for most of network structures, including two stages or parallel systems, it doesn't cover systems with more than two stages. To overcome this issue, A general network DEA model which is capable to model and evaluate all network production systems in a unified development was introduced (Kazemi Matin and Azizi, 2015) [13]. The multiplier and envelopment network DEA models have different results in presenting divisional efficiency. Also, proper benchmarks cannot be derived by most of network DEA models (Chen et al., 2013) [14]. The efficiency score of general multi-stage systems, where each stage consumes exogenous inputs in addition to intermediate products was evaluated (Kao, 2014) [15].

Most of the real world production processes are multi-stages and dealing with network production processes has increased in recent DEA literature. One related issue in this context is ranking multi-stage production units with network DEA models.

Similar to Multi-Criteria Decision Analysis (MCDA), ranking units in the DEA has become an acceptable technique. Many ranking methods with different criteria are available in the DEA literature. Considering these models and the availability of a model in DEA commercial software as an indication of popularity, it will be found that AP super-efficiency method (Anderson and Peterson, 1993) [16] as the most popular model for ranking units; see for example (Cook and Seiford, 2009) [5]. In AP ranking method, in contrast to DEA efficiency models, each observation is excluded from its own reference set and it is possible to compute efficiency scores greater than one.

In classic DEA, the concept of AP super-efficiency is related to differentiate the performance of efficient units. Although in the DEA evaluation of network production process, there are a few efficient units, but the super-efficiency scores still contain useful information about the production process. Comparing the efficiency and the super-efficiency distributions is helpful for ranking units and also outlier identification, i.e. efficient units with very high AP score. For example, see (Banker and Chang, 2006) [17] for more details.

[Downloaded from mail.ijaor.ir on 2026-11-27]

In contrast with its popularity, the AP ranking method has its limitations which need to be considered in applications. Seiford and Zhu (1999) [18] indicated under what circumstances the super efficiency model can be infeasible. A model which calculates the same efficiency score as the classical super efficiency model for feasible units, but the units which are infeasible under the classical super efficiency model are feasible under their model was presented (Lee et al., 2011) [19]. One model to calculate the efficiency score of inefficient DMUs and the super efficiency score of efficient ones as well was presented [20] (Chen, 2013).

In this paper a general network DEA model and its super efficiency version under VRS technology is presented. The results will be compared with the classical DEA models in efficiency and also super efficiency estimations under VRS technology in a wheat farming application. In the application, each province is considered as a parallel system with two processes in which each process is composed of two series processes. An interesting and considerable point which is seen in the results is in contrast to classical DEA models, the efficiency score of some inefficient DMUs is different with their super efficiency in the network DEA analysis. The main contributions of this paper are as follows:

- The super efficiency model is presented for systems with network structure to rank and evaluate their performance.
- An application of data envelopment analysis method is presented to evaluate and compare performance of provinces of Iran in wheat farming.
- The numerical example shows the results of the super efficiency model of network systems are different to the ones of black-box systems.

The rest of this paper unfolds as follows. In section 2, a brief review of some network DEA models under the VRS technology is presented along with a general network DEA model and its super efficiency version. Section 3 is devoted to applying the new general super-efficiency network model for performance evaluation of wheat production in Iran and comparing the results. Section 4 concludes.

2 Network DEA and super-efficiency network DEA models

Suppose there are n DMUs, and DMUj; j=1,…,n represents unit j whose input and final output vectors are $\boldsymbol{x_j}= (x_{1j},\ldots,x_{mj})$ and $\boldsymbol{y_j}= (y_{1j},\ldots,y_{sj})$, respectively.

The efficiency score of DMU_k in DEA is calculated as the ratio of its weighted output to weighted input subject to non-negative and universal weights.

The CCR model (Charnes et al., 1978) [2] is used to estimate a CRS production function while the BCC model (Banker et al., 1984) [3] allows for the VRS assumption of the estimated production function.

With the above notations, the CCR model is as follows, when DMU_k is under evaluation:

[Downloaded from mail.ijaor.ir on 2026-11-27]

$$\begin{aligned} \theta_k = Max\ & \frac{\sum_{r=1}^{s} u_r y_{rk}}{\sum_{i=1}^{m} v_i x_{ik}} \\ s.t\ \ & \frac{\sum_{r=1}^{s} u_r y_{rj}}{\sum_{i=1}^{m} v_i x_{ij}} \le 1,\ j = 1,...,n \\ & v_i, u_r \ge 0,\ r = 1,...,s\ ,\ i = 1,...,m \end{aligned} \tag{1}$$

In optimality, θ_k shows technical efficiency for DMU_k . If $\theta_k = 1$, DMU_k is defined efficient and for $\theta_k < 1$ DMU_k is said inefficient. The BCC model computes efficiency score in a VRS technology and can be presented as follows.

$$\begin{aligned} \theta_k = Max\ & \frac{\sum_{r=1}^{s} u_r y_{rk} - u_0}{\sum_{i=1}^{m} v_i x_{ik}} \\ s.t\ \ & \frac{\sum_{r=1}^{s} u_r y_{rj} - u_0}{\sum_{i=1}^{m} v_i x_{ij}} \le 1,\ j = 1,...,n \\ & v_i, u_r \ge 0,\ r = 1,...,s\ ,\ i = 1,...,m \\ & u_o\ free \end{aligned} \tag{2}$$

The super-efficiency score for DMU_k in the VRS technology can be obtained by solving the following linear programming model.

$$\begin{aligned} \theta_k = Max\ & \sum_{r=1}^{s} u_r y_{rk} - u_0 \\ s.t\ & \sum_{i=1}^{m} v_i x_{ik} = 1 \\ & \sum_{r=1}^{s} u_r y_{rj} - \sum_{i=1}^{m} v_i x_{ij} - u_0 \le 1, \quad j = 1,...,n, j \ne k \\ & v_i, u_r \ge 0,\ r = 1,...,s\ ,\ i = 1,...,m \\ & u_o\ free \end{aligned} \tag{3}$$

Note that the only difference between model (3) and the conventional BCC model is that in super-efficiency evaluation for DMU_k, the unit k is removed from the reference set. Although for efficient units super-efficiency score may be achieved greater than one, inefficient units have equal efficiency and super-efficiency scores. See (Anderson and Peterson, 1993) [16] and (Zhu, 2001) [21] for more details.

In these evaluations, production units are considered as black-boxes, i.e. units consume some inputs to produce some outputs, and possible internal processes and intermediate products are totally ignored. Considering intermediate products to achieve a more realistic evaluation of the units, leads to a new modification of the conventional super-efficiency DEA model which can be named "super-efficiency network DEA" model. Before proceeding

[Downloaded from mail.ijaor.ir on 2026-11-27]

further in this development, some basic network DEA models and a new general network DEA model in dealing with multi-stage production process are presented.
One of the most common structures of network systems in the DEA is a simple two-stage network which is depicted by figure 1.

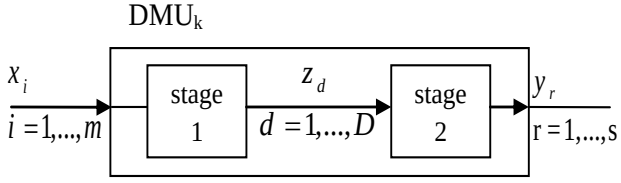

Figure 1. Two stage system

Here, z_d are denoted as *d*th intermediate products of process *1* which are the outputs of process *1* and are consumed as the inputs of process *2* to produce the final outputs.
The proposed model for efficiency evaluation of two-stage systems (Kao and Hwang, 2008) in VRS technology can be presented as follows:

$$\begin{aligned} Max \quad & \sum_{r=1}^{s} u_r y_{rk} - w_0 - u_0 \\ s.t \quad & \sum_{i=1}^{m} v_i x_{ik} = 1 \\ & \sum_{d=1}^{D} w_d z_{dj} - w_0 - \sum_{i=1}^{m} v_i x_{ij} \le 0, \ j = 1,...,n \\ & \sum_{r=1}^{s} u_r y_{rj} - u_0 - \sum_{i=1}^{m} w_d z_{dj} \le 0, \ j = 1,...,n \\ & w_d, u_r, v_i \ge 0, d = 1,...,D, i = 1,...,m, r = 1,...,s \\ & u_o, w_o \ free \end{aligned} \tag{4}$$

In the literature, parallel network, which is shown in figure 2 is also considered as an important special structure of network production systems.

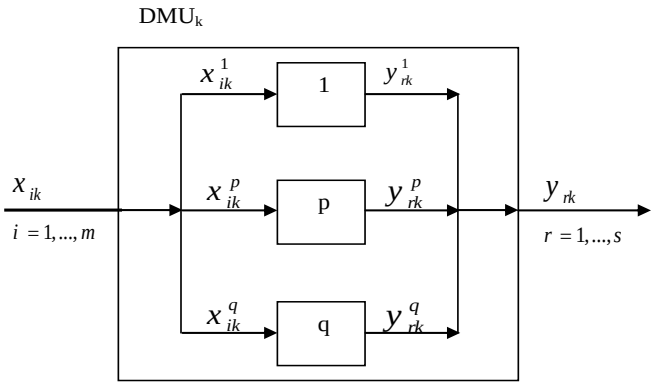

Figure 2. Parallel system

Note that in parallel structure, there are the following relations between inputs/outputs of sub-processes and total input/output of the stages.

[Downloaded from mail.ijaor.ir on 2026-11-27]

$$\sum_{p=1}^{q} x_{ik}^{p} = x_{ik}, i = 1,...,m, \qquad \sum_{p=1}^{q} y_{rk}^{p} = y_{rk}, r = 1,...,s$$

The parallel production systems are also studied in (Kao, 2009, b) in the VRS technology with the following model:

$$\begin{aligned} \theta_k = max \ & \sum_{r=1}^{s} u_r y_{rk} - u_0^p \\ s.t \quad & \sum_{r=1}^{s} u_r y_{rj}^{p} - \sum_{i=1}^{m} v_i x_{ij}^{p} - u_0^p \le 0 \quad j = 1,...,n \ \& \ p = 1,...,q \\ & \sum_{i=1}^{m} v_i x_{ik} = 1 \\ & v_i, u_r \ge 0 \qquad r = 1,...,s \ \& \ i = 1,...,m \\ & u_0^p \quad free \end{aligned} \tag{5}$$

Kao (2009a) [11] proposed transferring a general network structure into series stages, which contains some parallel processes.

Series and parallel are just two special cases of network systems, could not cover all network processes. For example, it is possible to assume a network in which the inputs of a stage include both intermediate products and some additional inputs. This is just a simple case of general network processes.

In the rest of the paper and to develop a network supper-efficiency model, we use the following general model proposed (Kazemi Matin and Azizi, 2015) [13] for efficiency evaluation of general network systems in VRS technology.

$$\begin{aligned} \theta_k = \max \ & \sum_{p=1}^{q} \sum_{r=1}^{s} u_r y_{rk}^{Op} - u_0^p \\ s.t \quad & \sum_{p=1}^{q} \sum_{i=1}^{m} v_i x_{ik}^{p} = 1 \\ & \sum_{r=1}^{s} u_r y_{rj}^{p} + \sum_{c=1}^{q} \sum_{d=1}^{D} w_d^p z_{dj}^{pc} - \sum_{i=1}^{m} v_i x_{ij}^{p} - \sum_{c=1}^{q} \sum_{d=1}^{D} w_d^c z_{dj}^{cp} - \sum_{c=1}^{q} \sum_{r=1}^{s} u_r y_{rj}^{Icp} - u_0^p \le 0 \quad \begin{cases} j = 1,...,n \\ p = 1,...,q \end{cases} \\ & u_r, v_i, w_d^p \ge 0 \qquad r = 1,...,s, \quad d = 1,...,D, \quad i = 1,...,m, \quad p = 1,...,q \end{aligned} \tag{6}$$

Here, x_i^p is the ith input consumed in p^{th} process, z_d^{pc} is the dth intermediate product, which is produced in p^{th} process and all or part of it is used in process c (c=1,…,q), z_d^{cp} is the dth intermediate product, which is produced in c^{th} process (c=1,…,q) and all or part of it is used in process p, y_r^p is the rth output produced by p^{th} process, y_r^{Op} is the rth output produced as the final output of pth process, and y_r^{Icp} is the rth output produced in process c (c=1,…,q) and part of it is consumed as input of only one process (p^{th} process), and in contrast with intermediate products cannot be consumed or produced by other processes. It is assumed that intermediate products are produced and consumed among processes, and they are not used as initial inputs or produced as final outputs.

[Downloaded from mail.ijaor.ir on 2026-11-27]

This generalized network DEA model can be used for efficiency evaluation of all production processes with network structures in a unified model. More details can be found in (Kazemi Matin and Azizi, 2015) [13].
After removing the under evaluation unit, DMU_k, from the reference set, the following super-efficiency version of the above introduced general network model will be achieved.

$$\begin{aligned}
&\theta_k = \max \ \sum_{p=1}^{q}\sum_{r=1}^{s} u_r y_{rk}^{Op} - u_0^p \\
&s.t \quad \sum_{p=1}^{q}\sum_{i=1}^{m} v_i x_{ik}^{p} = 1 \\
&\sum_{r=1}^{s} u_r y_{rj}^{p} + \sum_{c=1}^{q}\sum_{d=1}^{D} w_d^p z_{dj}^{pc} - \sum_{i=1}^{m} v_i x_{ij}^{p} - \sum_{c=1}^{q}\sum_{d=1}^{D} w_d^c z_{dj}^{cp} - \sum_{c=1}^{q}\sum_{r=1}^{s} u_r y_{rj}^{Icp} - u_0^p \le 0 \quad \begin{cases} j = 1,...,n \ \& \ j \ne k \\ p = 1,...,q \end{cases} \\
&u_r, v_i, w_d^p \ge 0 \qquad r = 1,...,s, \quad d = 1,...,D, \quad i = 1,...,m, \quad p = 1,...,q
\end{aligned} \tag{7}$$

Model (7) not only can be used for estimating the super efficiency of efficient DMUs, but it is also applicable to evaluate the effect of inefficient DMUs. Unlike the classical models, in the application we will see that network DEA structures may lead to different efficiency and super-efficiency scores for inefficient units. It is because that in network DEA, in contrast with DEA, both efficient and inefficient units are involved in performance evaluation of other units. So, we can benefit of the proposed network super-efficiency model to analyze the effect of eliminating each unit on the multi-stage estimated production frontier. In the next section, in a real-world application in wheat production, some features of these different behaviors from super-efficiency point of view are appeared. More discussions and developments need to completely shows relations between DEA production frontiers in the case of standard and network structures, which are left as interesting challenges for future studies.

3 An application in wheat farming

Roughly less than half of Iran's total area is suitable for agriculture, but some activities such as pollution produced by vehicle emissions, deforestation and overgrazing have harmed the land, and also poor soil and the shortage of adequate water distribution, make most of these suitable area are not under cultivation. Both systems of irrigated and rainfed farming are done in different parts of the cultivated area in Iran. Rainfed agriculture is usually practiced in zones with adequate precipitation. In Iran, Mazandaran and Guilan are the provinces which are located near the Caspian Sea and receive high amounts of precipitation. Some provinces such as Azerbaijan-east and Azerbaijan-west are the ones with adequate winter rains, so, additional irrigation is not required for them. Rainfed farming cannot be used in arid and semi arid provinces like Yazd and Hormozgan, and these provinces have to use irrigation farming for production.

Wheat is considered as one of the main primary foods of Iranians qua a large part of the cultivated area is devoted to producing it. Also, it is the most important agricultural commodities in Iran in terms of production and consumption. Producing wheat is so important in terms of income, nutrition and employment of people. On the consumption side, per capita consumption of bread wheat is about 160 kilograms in Iran, which is higher than most of the other countries. Iran is one of the largest importers of wheat, because of its great demand. So,

[Downloaded from mail.ijaor.ir on 2026-11-27]

from an economic perspective, being independent in wheat production can be one of the most important goals of Iran's government. Now, rainfed and irrigation farming are utilized in most of Iran to produce wheat.

This section analyzes wheat farming efficiency in provinces of Iran in 2008-2009 crop years, which was started on 22 September 2008 and ended on 22 September 2009. In the mentioned time, Iran consisted of 30 provinces which were managed by the government. To estimate super efficiency of provinces and evaluate the possible impact of removing one province from the production set on estimated efficiencies distributions, model (7) is applied to the network structure depicted in figure 3. Then the achieved results are compared with the ones of model (3).

The computed efficiency and super efficiency scores of models (7) and (3) for general network will be compared with the scores of units obtained by applying classic DEA models (6) and (2). Figure 3 shows inside of sample wheat farming production unit as a network system with four processes which is represented by two parallel processes where each process in parallel structure composed of two processes in series structure. In this application, the two parallel processes are irrigation farming and rainfed farming and the two series processes are sowing-growing and harvesting, respectively. In figure 3, x_{1k}, x_{2k}, y_{1k} are used to show inputs and final output of the system.

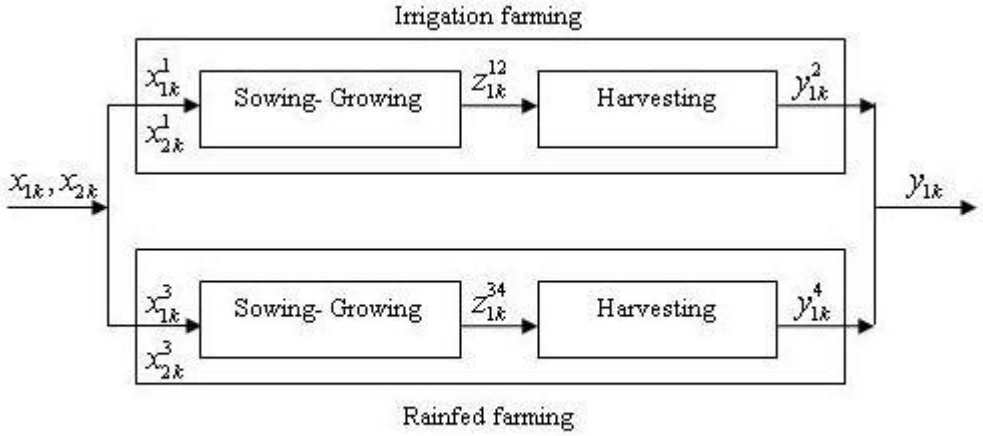

Figure 3: network structure of wheat farming in provinces

Table 1 summarizes descriptive statistics of the data set on Iran wheat farming in 2008-2009 crop years. Data are gathered by the Iranian Ministry of Agricultural Jihad (www.maj.com). The inputs of the system, which are also the inputs of the first and third processes, are cultivated area (based on hectare) and consumed seed (based on ton). There is one intermediate product in the system which is the output of the sowing-growing process as well as the input of the harvesting process. The intermediate product is harvested area (based on hectare). The output of the system, which is also the output of the second and fourth process, is wheat production (based on ton).

Yazd, Sistan-Baluchestan and Hormozgan are the provinces which do not use rainfed farming. Both of irrigation and rainfed farming are used in the other provinces. Some provinces are more active in rainfed farming such as Azerbaijan-East, Azerbaijan-West, Ardabil, Ilam, Chahar Mahaal and Bakhtiari, Khorasan-Razavi, Khorasan-North, Zanjan, Qazvin, Kurdistan, Kermanshah, Kohgiluyeh and Boyer-Ahmad, Golestan, Gilan, Lorestan, Mazandran, Markazi and Hamadan. The other provinces are more active in irrigation farming.

[Downloaded from mail.ijaor.ir on 2026-11-27]

Table 1 Descriptive statistics for a data set

	Irrigation farming			
	Cultivated area	Harvested area	Wheat production	Consumed seed
Min	105	100	283	13
Max	502325	384678	1307213	118362
Average	87040.4	161878	295846	20728.73
	Rainfed farming			
	Cultivated area	Harvested area	Wheat production	Consumed seed
Min	0	0	0	0
Max	516635	512798	512203	59601
Average	80178.87	140144.37	150416.9	21088.53

3.1 Results

The Lingo software is used to compute efficiency scores of the provinces with the above described network structure. Efficiency scores are calculated under the assumption of variable returns to scale. The results of the general network model (model 6) and BCC model (model 2) for determining the efficiency of the wheat production in Iran provinces are reported in Table 2.

Table 2 The results of efficiency calculated by the general model and BCC model

Provinces (DMUs)	(VRS) Network Efficiency	BCC efficiency	Provinces (DMUs)	(VRS) Network Efficiency	BCC efficiency
1. Azerbaijan, East	0.228	0.368	16. Fars	0.781	1
2. Azerbaijan, West	0.417	0.648	17. Qazvin	0.508	0.560
3. Ardabil	0.520	0.858	18. Qom	0.773	1
4. Isfahan	0.528	0.540	19. Kurdistan	0.300	0.496
5. Ilam	0.251	0.288	20. Kerman	0.596	0.628
6. Bushehr	0.066	0.133	21. Kermanshah	0.488	0.716
7. Tehran	0.985	1	22. Kohgiluyeh and Boyer-Ahmad	0.289	0.413
8. Chahar Mahaal and Bakhtiari	0.441	0.466	23. Golestan	0.798	1
9. Khorasan, South	0.433	0.647	24. Guilan	0.333	1
10. Khorasan, Razavi	0.556	1	25. Lorestan	0.291	0.439
11. Khorasan, North	0.382	0.459	26. Mazandaran	0.605	0.684
12. Khuzestan	0.410	0.575	27. Markazi	0.419	0.717
13. Zanjan	0.333	0.625	28. Hormozgan	0.765	0.931
14. Semnan	0.635	0.685	29. Hamadan	0.423	0.665
15. Sistan and Baluchestan	0.457	0.574	30. Yazd	0.671	0.834

The results of applying the general model (model (7)) and AP model (model (3)) for determining super efficiency of the wheat production in Iran provinces are summarized in Table 3.

[Downloaded from mail.ijaor.ir on 2026-11-27]

Table 3 The results of super efficiency calculated by the general model and BCC model

Provinces (DMUs)	Network super efficiency	BCC super efficiency	Provinces (DMUs)	Network super efficiency	BCC super efficiency
1. Azerbaijan, East	0.228	0.368	16. Fars	0.855	No feasible solution
2. Azerbaijan, West	0.417	0.648	17. Qazvin	0.508	0.560
3. Ardabil	0.524	0.858	18. Qom	0.773	1.173
4. Isfahan	0.528	0.540	19. Kurdistan	0.300	0.496
5. Ilam	0.251	0.288	20. Kerman	0.596	0.628
6. Bushehr	0.066	0.133	21. Kermanshah	0.488	0.716
7. Tehran	0.995	1.748	22. Kohgiluyeh and Boyer-Ahmad	0.294	0.413
8. Chahar Mahaal and Bakhtiari	0.441	0.466	23. Golestan	0.830	1.217
9. Khorasan, South	0.450	0.647	24. Guilan	2.266	2.411
10. Khorasan, Razavi	0.617	1.007	25. Lorestan	0.291	0.439
11. Khorasan, North	0.382	0.459	26. Mazandaran	0.605	0.684
12. Khuzestan	0.410	0.575	27. Markazi	0.419	0.717
13. Zanjan	0.333	0.625	28. Hormozgan	0.765	0.931
14. Semnan	0.635	0.685	29. Hamadan	0.423	0.665
15. Sistan and Baluchestan	0.457	0.574	30. Yazd	0.671	0.834

As it is shown in table 2, there is no efficient province under the general model, but the BCC model evaluates six provinces efficient. Tehran has the best performance using both classic and network structure models (2) and (6). Also, Tehran has the second rank among other provinces in general network super-efficiency and the BCC super efficiency models.

The result shows that provinces may achieve different ranks based on using the general network or classical DEA ranking method.

As it can be seen, the BCC efficiency scores of the provinces 2 and 19 are greater than the province 8 but in general network efficiency models these relations are reversed. This is because of considering internal processes in the network evaluations. In table 3, it is shown that the same relations can be established for the super efficiency scores in some cases. The efficiency score, which are obtained by the general model are less than the one obtained by the BCC model for each province, and the efficient province under the BCC model may be inefficient in the general model like Tehran, Khorasan, Razavi, Fars, Qom, Golestan and Guilan. This shows that the general model evaluates provinces more exactly. There is the similar result for models (3) and (7) in table 3. Except Fars, which has no feasible solution under BCC super efficiency model, other provinces have less general super efficiency score in comparison with their BCC super efficiency. Guilan is one of the best provinces using the BCC model, but it has a low efficiency score under general model. Also, Guilan has the highest super efficiency score using model (3) and model (7).

Now, we draw your attention to the column chart plotted from the results of the BCC efficiency and the BCC super-efficiency (chart 1), and column chart plotted from the results of general efficiency and general super-efficiency (chart 2). The solid and hollow columns in column chart 1 show the efficiency score of the 30 provinces of Iran in 2008-2009 crop year, which are achieved by the BCC model and the BCC super-efficiency model, respectively. The solid and hollow columns in column chart 2 show the efficiency score of the 30 provinces of Iran in 2008-2009 crop year, which are achieved by the general model and the general super-

[Downloaded from mail.ijaor.ir on 2026-11-27]

efficiency model, respectively. In the both charts the horizontal and vertical axes represent the provinces and their efficiency score, respectively.

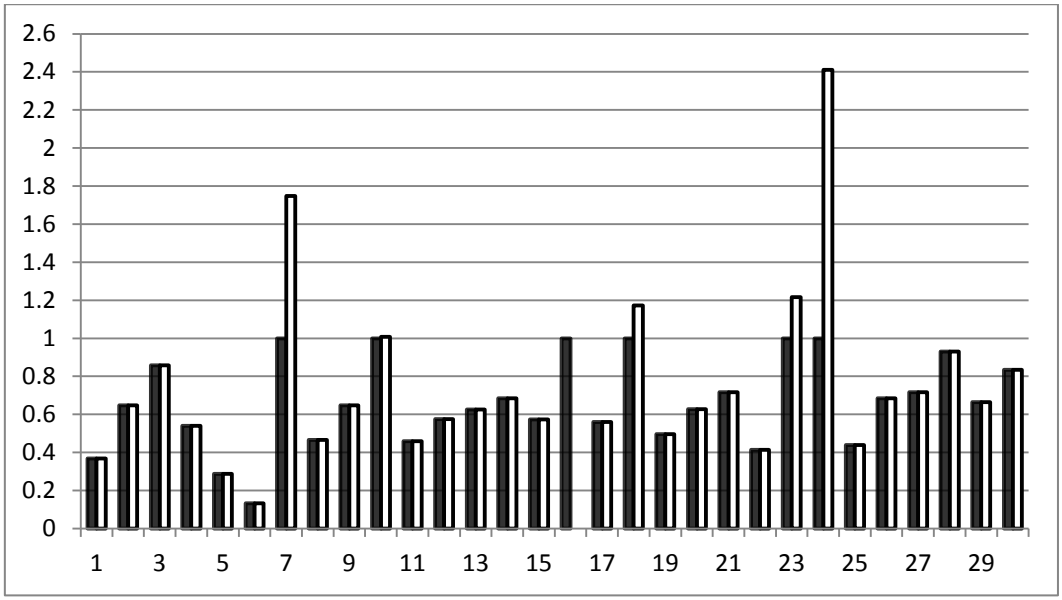

Chart 1 BCC efficiency and BCC super efficiency scores of wheat production in 30 provinces of Iran, 2008-2009 crop year

As it can be seen in chart 1, BCC efficiency of provinces which are not efficient is equal to their BCC super efficiency, and only efficient ones have different efficiency and super efficiency scores. So, inefficient provinces have the same ranking based on the BCC model and the BCC super efficiency model. Efficient provinces which have the same efficiency score under BCC model have different super efficiency scores, which make them to be ranked.

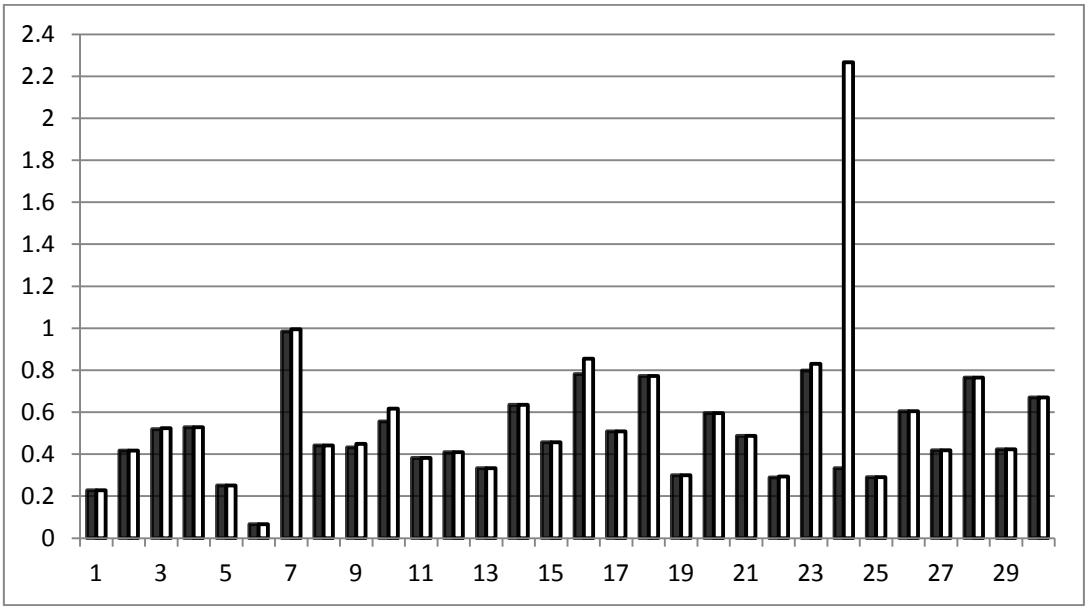

Chart 2 Network efficiency and network super efficiency score of wheat production in 30 provinces of Iran, 2008-2009 crop year

[Downloaded from mail.ijaor.ir on 2026-11-27]

Chart 2 shows that unlike the BCC efficiency and the BCC super efficiency scores of the inefficient provinces, the general efficiency score and the general super efficiency score of them may not be the same. For example, see provinces like Teran, Khorasan-South, Khorasan-Razavi, Fars, Kohgiluyeh, Boyer-Ahmad, Golestan and Guilan. So ranking inefficient provinces based on the general model is not the same as the one based on the general super efficiency model. Although Guilan has low general efficiency and only six DMUs have lower efficiency score than Guilan, its super efficiency is the best one. Bushehr has the worst performance using model (6) and (7).

Note that the two efficiency and super-efficiency models based on the network structure of the wheat farming in provinces provide a better discrimination power than classical DEA models. These help us to detect inefficiency sources of the wheat production more precisely by detecting inefficient units and stages.

4 Conclusions

Traditional DEA models cannot be applied to production systems with network structure. In this article a brief review of some basic network DEA models is given. Then a new general network model is presented to evaluate efficiency and super-efficiency scores of multi-stage production units. For illustration purpose, wheat farming in Iranian provinces is evaluated from both efficiency evaluation and super-efficiency ranking viewpoints. The results show better discrimination in using network DEA in the application. As it was expected, the network super-efficiency score of a unit exceeds its computed efficiency score. As a notable point and in contrast to classic DEA models, it is possible to see inefficient units which have different efficiency and super-efficiency scores. These results show exploring the production sets and production frontiers of network DEA deserve more attention in the future studies.

References

1. Farrell MJ (1957) The Measurement of Productive Efficiency. J. r. stat. soc. 120: 253-281.
2. Charnes A, Cooper WW, Rhodes E (1978) Measuring the efficiency of decision making units. Eur. j. oper. res. 2: 429 – 444.
3. Banker RD, Charnes A, Cooper WW (1984) Models for Estimation of Technical and Scale Inefficiencies in Data Envelopment Analysis, Manage. Sci. 30: 1078-1092.
4. Emrouznejad A, Parker BR, Tavares G, (2008) Evaluation of research in efficiency and productivity: A survey and analysis of the first 30 years of scholarly literature in DEA. Soc. Econ. Plann. Sci. 42: 151-157.
5. Cook WD, Seiford LM (2009) Data envelopment analysis (DEA) – Thirty years on. Eur. j. oper. res. 192: 1-17
6. Zhu J (2000) Multi-factor performance measure model with an application to Fortune 500 companies. Eur. j. oper. res. 123: 105–124.
7. Lewis HF, Sexton TR (2004) Network DEA: efficiency analysis of organizations with complex internal structure. Comput. Oper. Res. 31: 1365–1410.
8. Kao Ch, Hwang SN (2008) Efficiency decomposition in two-stage data envelopment analysis: An application to non-life insurance companies in Taiwan. Eur. j. oper. res. 185: 418-429.
9. Li Y, Chen Y, Liang L, Xie JH (2012) DEA models for extended two-stage network structures. Omega-Int. J. Manage. S. 40: 611–618.
10. Kao Ch (2009,b) Efficiency measurement for parallel production systems. Eur. j. oper. res. 196: 1107-1112.
11. Kao Ch (2009,a) Efficiency decomposition in network data envelopment analysis: A relational model. Eur. j. oper. res. 192: 949-962.
12. Lozano S (2011) Scale and cost efficiency analysis of networks of processes. Expert. Syst. Appl. 38: 6612–6617.

[Downloaded from mail.ijaor.ir on 2026-11-27]

13. Kazemi Matin R, Azizi R (2015) A unified network DEA model for performance measurement of production systems. Meas, 60: 186-193.
14. Chen Y, Cook WD, Kao Ch, Zhu J (2013) Network DEA pitfalls: Divisional efficiency and frontier projection under general network structures. Eur. j. oper. res. 226: 507-515.
15. Kao Ch (2014) Efficiency decomposition for general multi-stage systems in data envelopment analysis. Eur. j. oper. res. 232: 117-224.
16. Andersen P, Petersen NC (1993) A procedure for ranking efficient units in data envelopment analysis. Manage. Sci. 39: 1261–129.
17. Banker RD, Chang H (2006) The super-efficiency procedure for outlier identification, not for ranking efficient units, Eur. j. oper. res. 175(2): 1311-1320.
18. Seiford LM, Zhu J (1999) Infeasibility of super-efficiency data envelopment analysis models, INFOR. 37: 174–187.
19. Lee HSh, Chu ChW, Zhu J (2011) Super-efficiency DEA in the presence of infeasibility. Eur. j. oper. res. 212: 141–147.
20. Chen CM (2013) Super efficiencies or super inefficiencies? Insights from a joint computation model for slacks-based measures in DEA. Eur. j. oper. res. 226: 258–267.
21. Zhu J (2001) Super-efficiency and DEA sensitivity analysis. Eur. j. oper. res. 129: 443-455.
http://www.maj.ir/portal/Home/Default.aspx?CategoryID=20ad5e49-c727-4bc9-9254-de648a5f4d52 last access: July 8, 2014.

[Downloaded from mail.ijaor.ir on 2026-11-27]