International Journal of Applied Operational Research
Vol. 13, No. 4, pp. 15-30, Autumn 2025

Journal homepage: ijorlu.liau.ac.ir

A Valuation Model for Technology Financing Methods in Renewable Energy Deployment

A. Abbasian, S. Aghasi*, S. M. R. Davoudi

Received: 2 June 2025; **Accepted:** 16 September 2025

Abstract Nowadays, a large part of company properties and assets is related to intangible assets. In this study, a conceptual model was presented to identify the factors affecting technology valuation in the field of financing by using grounded theory. For this purpose, a model was provided by using the opinions of the experts of Isfahan Regional Electricity Distribution Company and a comprehensive review of technology valuation selection for analyzing financial decisions in the area of financing and investment in the solar energy industry. To develop the presented model, a qualitative model was applied based on grounded theory. Regarding all the above-mentioned cases in this study, the technology valuation model for the analysis of financial decisions in the field of financing and investment in the solar energy industry was designed based on the experts' opinions. In addition, there are three main categories (valuation model, technology organization, and investment) and nine sub-categories (valuation model, technology organization, and investment) and nine sub-categories (low cost, exclusive experience, technology value, communication, technological infrastructure, agility, knowledge management, human resources, new financing model). To ensure whether the factors are selected correctly or not, a content validity analysis was conducted for each category. Based on the results, all of the categories had the required sufficiency to be included in the valuation model. Then, the structural equation model was used to model the relationships of indicators in LISREL software to determine the effect of each factor on each other and its main factors. Based on the obtained results, the relationship between the sub-category of human resources and the technology organization in the financing valuation model was insignificant with the impact factor of 0.24. Therefore, this criterion cannot be considered in the financing valuation model. However, the relationship of other factors with their main criteria in the financing valuation model was significant. Finally, the model validity was investigated by using statistical tests.

Keywords: Technology Valuation, Financing, Grounded Theory, Renewable Energy, Structural Equations

[Downloaded from mail.ijaor.ir on 2026-11-28]

[DOI: 10.71885/ijorlu-2025-4-669]

*** Corresponding Author. (✉)**
E-mail: saeed.aghasi@iau.ac.ir (S. Aghasi)

A. Abbasian
Industrial and Financial Management, Deh.C., Islamic Azad University, Dehaghan, Iran

S. Aghasi
Department of Management, Deh.C., Islamic Azad University, Dehaghan, Iran

S. M. R Davoudi
Department of Management, Deh.C., Islamic Azad University, Dehaghan, Iran

1 Introduction

In recent years, the urgency to address climate change and transition to sustainable energy sources has propelled the renewable energy sector into the forefront of global economic and environmental discussions. As governments, businesses, and communities increasingly recognize the importance of reducing carbon emissions and promoting energy independence, the deployment of renewable energy technologies has become essential. However, the successful implementation of these technologies often hinges on the availability and effectiveness of financing methods [1].

Technology is a body of knowledge which is used for creating tools, processing issues, and extracting materials. The concept of "technology" is highly extensive and each person has a personal understanding of the meaning of technology. Purposeful activity is considered as the core of the technology. Productivity is a primary value tool in the technological community [2]. There is no standard definition of financial technologies although the rapid development of financial technologies has been globally welcomed [1-2]. Many researchers studied in financial technology and defined financial technology as a new financial industry. The Financial Stability Board (FSB) defined financial technology as technologically enabled financial innovation [3]. In [4], it was defined financial technology as an interdisciplinary subject which combines finance, technology management, and innovation management. According to [5], financial technology refers to a set of recently developed digital technologies which have been applied to financial services or are likely to be applied in the future. [6] claimed that the financial technology of using technology has been improved for financial services. [7] defined financial technology as a set of innovations and an economic sector focusing on the application of recently developed digital technologies in financial services [8]. The valuation of financial status, adjustment of financial reports for individuals inside and outside the organization, and decisions for buying or selling assets cannot be solved simply compared to the past. During the process of solving all of these issues, the valuation of intangible assets is considered as a vital factor playing a highlighted role [9]. In addition, cash is considered as one of the significant and vital resources for every economic unit [10]. The cash held by the company in capital markets with a low level of efficiency is considered as a relevant factor affecting the capital value. Furthermore, liquidity (financial power) leaves a significant effect on financial decisions [11]. Thus, higher financial flexibility helps companies implement their investment projects without relying on capital markets [12]. Moreover, the growing trend of technological development in different fields requires accurate and scientific planning for its economic and social application. Regarding the weak economic conditions in many developing countries, the need to consider the financial, investment, and economic applications of renewable energy is considered by the experts and implementers of development programs. As a result, financing methods are of particular significance. Financing refers to the process of financing for business activities, purchases of goods, or investment [13]. Financing in companies is performed by debt financing and shares financing. Debt financing is the money which is normally given to the business owner for a guarantee providing that the debt is repaid with a fixed or variable interest at a certain time [14].

Accordingly, this study investigates the model for explaining the technology valuation for analyzing financial decisions in the field of financing and investment. To answer this question, the essential technical variables are first selected by experts using a grounded theory since they should involve all the variables affecting the commercial viability of the project. In this regard, the criteria are selected within the research process. Thus, a grounded theory is

[Downloaded from mail.ijaor.ir on 2026-11-28]

[DOI: 10.71885/ijorlu-2025-4-669]

used to explain the model and obtain the primary hypotheses. The desired data are the result of interviews, reports, and documents prepared by internal and external research centers, academic centers, case studies, and managers' experiences. The analysis of such sources by focusing on primary data leads to open coding and understanding of concepts. Then, the categories are received in the axial coding and the relationship between the categories is determined by selective coding. In other words, the dimensions of the problem can be clarified. Finally, the model of theory creation is established by selective coding and structural equation path analysis to achieve valuation in financing processes. This paper presents a comprehensive valuation model for technology financing methods specifically tailored for renewable energy deployment. The model aims to evaluate various financing options, including public-private partnerships, venture capital, green bonds, and government incentives, to determine their effectiveness in facilitating the adoption of renewable energy technologies. By analyzing the financial, economic, and environmental impacts of these methods, this study seeks to provide stakeholders with a clearer understanding of how to optimize their investments in renewable energy projects. Furthermore, the valuation model incorporates key factors such as risk assessment, return on investment, and the socio-economic benefits of renewable energy deployment. By doing so, it not only addresses the financial viability of different financing methods but also emphasizes the broader implications for sustainable development and energy security. As the renewable energy landscape continues to evolve, this model serves as a valuable tool for policymakers, investors, and project developers, enabling them to make informed decisions that align financial goals with environmental sustainability. Ultimately, this research contributes to the ongoing discourse on renewable energy financing, offering insights that can drive innovation and accelerate the transition to a cleaner, more sustainable energy future.

2 Literature review

In this section, some studies conducted during the recent years about technology valuation in financial decisions are reviewed to identify the review of the literature and opinions of previous researchers. Different studies which used flow optimization methods can be mentioned about the financing in the renewable energy sector for electricity production. For instance, [15] studied the effect of income inequality on energy consumption in different countries during 2000-2019. Then, they investigated the moderating and threshold effects of digitalization on the effect of income inequality on energy consumption. The results showed that digitalization helps reduce the effect of the 3.654% increase in energy consumption caused by income inequality. In comparison, digitalization leaves a significant moderating effect on energy consumption in middle and high-income countries (Europe, America, and the Asia-Pacific region). In addition, the moderating effect of digitalization affects both free and non-free economies. [16] used computational fluid dynamics (CFD) and the concept of non-dimensionality through machine learning techniques to present a new method for forecasting the wind power potential of a cluster of wind turbines on the roof of a real city. Hamid and [17] used several artificial intelligence (AI) algorithms for identifying and locating grid-connected wind farms, significantly providing services to electric energy producers and distribution companies. Furthermore, this study aimed to maximize the efficiency of the wind energy system by considering the critical factors which affect the generation capacities such as wind speed, air density, turbine size, and geographical location. [18] discussed the effect of climate change on wind and solar energy infrastructure in India. Despite the changes in India's

[Downloaded from mail.ijaor.ir on 2026-11-28]

[DOI: 10.71885/ijorlu-2025-4-669]

climate in different geographical directions, the uncertainty in energy production decreased and an urgent need was felt to build wind turbines in the Himalayan heights. [19] focused on creating an appropriate database for using artificial intelligence tools to improve urban wind energy production. In this study, wind tunnel results are provided for different configurations in the city. [20] reviewed the recent developments of hybrid approaches based on artificial intelligence for forecasting wind power by emphasizing classification, structure, strength, weakness, and performance analysis. [21] presented a model for research and technology evaluation for decision analysis in the environmental and renewable energy sectors. [22] considered the concept of technology valuation as the most significant issue in the field of financing. [23] proposed an optimization method which is used for defining the optimal combination of wind turbine design and equipment type. This optimization plan can maximize the overall welfare of electricity in this process. [24] prioritized the evaluation indicators of information technology using fuzzy hierarchical analysis.

According to above mentioned, current models often focus primarily on financial metrics, neglecting the integration of multi-dimensional factors such as social, environmental, and technological aspects. There is a need for research that incorporates these dimensions into the valuation framework, providing a more holistic understanding of the impacts of financing methods on renewable energy projects. While existing studies may address financing methods in specific contexts, there is a lack of comprehensive research that examines how regional differences—such as regulatory frameworks, market maturity, and resource availability—affect the effectiveness of various financing approaches. Future research should aim to develop context-sensitive models that account for these regional variability's. As the renewable energy landscape evolves, new financing mechanisms such as green bonds, crowd funding, and decentralized finance are gaining traction. However, there is limited research on how these emerging methods can be effectively evaluated within existing valuation frameworks. Investigating their unique characteristics and impacts on renewable energy deployment represents a significant research gap. Most existing research provides a snapshot analysis of financing methods without considering their long-term impacts on renewable energy deployment. Longitudinal studies that track the performance and outcomes of various financing approaches over time are needed to better understand their sustainability and effectiveness. The role of various stakeholders—such as investors, policymakers, and local communities—in shaping financing decisions is often underexplored. Research that investigates stakeholder perspectives, motivations, and engagement strategies can enhance the understanding of how financing methods can be optimized for broader acceptance and success. While risk is a critical factor in financing renewable energy projects, existing models may not adequately address the complexities of risk assessment and management. There is a need for research that develops comprehensive risk assessment frameworks tailored to different financing methods, enabling stakeholders to make informed decisions. The rapid pace of technological innovation in the renewable energy sector presents challenges for traditional valuation models. Research is needed to explore how advancements in technology—such as energy storage, smart grids, and efficiency improvements—can be integrated into financing models to accurately reflect their potential impacts on project viability.

Based on the review of previous studies, the most significant research gaps are as follows:

- The lack of definition and explanation for the technology valuation model as the requirement of financing and investment in the current era and the presentation of this new concept for maximizing the use of renewable energies by the managers of electricity-producing companies.

[Downloaded from mail.ijaor.ir on 2026-11-28]

[DOI: 10.71885/ijorlu-2025-4-669]

- The lack of a comprehensive model for technology valuation to enhance the level of investment and financing in the industries active in the electricity distribution industry of renewable solar energy to apply modern technologies.
- The lack of determination for the type of relationships between the creative factors of technology valuation to maximize the use of the industry's activists in providing infrastructures for the use of technology.

3 Methods

The present study was applied in terms of objective and descriptive in terms of the method. The main objective of this study was to identify the main categories of technology valuation for analyzing financial decisions in the field of financing using grounded theory. In the qualitative part of the study, interviews were conducted with 20 experts from the regional electricity distribution company in Isfahan Province. In addition, the snowball sampling method was used to identify the factors affecting the valuation factors in the field of financing. After reviewing the contributions and collecting data from experts, the concepts were categorized to classify and analyze the findings from open and in-depth interviews. Such concepts were obtained from the analysis and interpretation of the primary raw data and that is why no limit was considered for the number of concepts. The coding of the findings involved splitting, conceptualizing, comparing, and classifying the data. Similar concepts were classified into a specific category after comparing the data with each other. Each of these categories can be divided into several subcategories based on different characteristics. The characteristics of the categories were associated with the expected accuracy and level of detailed investigation, and were used as a basis for the collection of supplementary data. Each of these main categories resulted in the consequences and presentation of a theory for valuation in the field of financing and was discussed separately. Then, the study dealt with the description of contributions investigated in the present study. Since the interviewees have work experience in more than one partnership, the general experiences of these individuals were used for data collection after collecting specific experiences about a partnership. Thus, the grounded theory in this study is a method that begins with data collection, continues with its systematic analysis, and ends with knowledge production. The theory produced based on the data is reliable as the collected data are documented and free of role.

3.1 Steps of analysis method

The analysis method in this study is classified into qualitative and quantitative parts. In the qualitative part, the main steps of this study are designed in two steps. The details of each step are presented below.

Step 1: First, a list of factors affecting the valuation factors in the fields of financing is selected using previous studies, library studies, and experts' opinions. In this step, the initial list of effective parameters is extracted by using interviews and interview analysis, and the list of effective indicators is obtained using grounded theory.

Step 2: In this step, the grounded theory questionnaire is designed and distributed based on the interviews and then coding and conceptualization are implemented after data collection. The coding of findings involves splitting, conceptualizing, comparing, and classifying the data. After comparing the data to each other, similar concepts are classified in a specific

[Downloaded from mail.ijaor.ir on 2026-11-28]

[DOI: 10.71885/ijorlu-2025-4-669]

category and each one can be divided into some subgroups in terms of different characteristics. Each of these categories results in the consequences and presentation of a theory to design a conceptual model for identifying the factors affecting the financing valuation, which is discussed separately in each partnership. Eventually, a conceptual model is produced with this systematic analysis. Fig. 1 displays the steps of the research implementation.

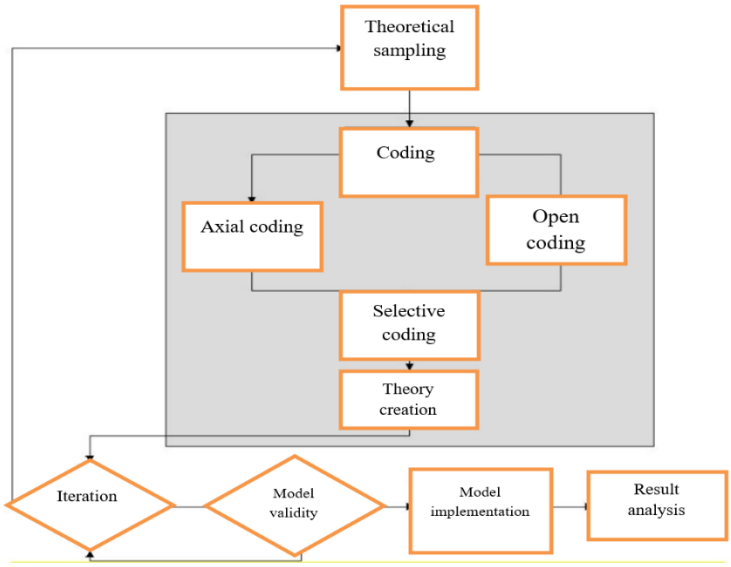

Fig 1. Steps of conducting the study

In addition to the qualitative part, the steps of the quantitative part include the following steps.

1. Identifying the factors affecting the valuation of the financing method
2. Determining the effect of each factor in the valuation of financing methods
3. Evaluating the correlation between the effective factors in the valuation of financing methods
4. Designing the final model for valuation

Step 1: *Identifying the factors affecting the valuation of the financing method*

In this phase, the affected factors are divided into two categories. The first category includes the observed variables and the second consists of the latent variables. The observed variables are known as the criteria which can affect the organizational process due to intra-organizational studies. Studying the variables observed in other organizations can always be fruitful for the analyst to identify the variables of the intended organization. However, such variables should be divided into groups for statistical analysis, so that the observed variables which are somehow related to each other are placed in a group. Such groups are the intended latent variables. In this case, the latent variables become an appropriate cover for the observed variables. It should be noted that the hidden variables are the nodes of the model. To obtain these variables, it is required to use data gathering tools. In this regard, a questionnaire can be of significant for helping an analyst. There are two important points for preparing questionnaires. The first point is that the number of questions in the questionnaires should equal the number of observed variables. The second point is that the number which should be answered should be according to the designed model so that the model is covered well. Before preparing the questionnaire, some data should be collected by using the library method. In this

[Downloaded from mail.ijaor.ir on 2026-11-28]

[DOI: 10.71885/ijorlu-2025-4-669]

section, the books and articles about the relevant field are used to identify the most important observed variables.

Step 2: *Determining the effect of each factor in the valuation of financing methods*

In this phase, a conceptual model of the desired organization is presented to show the existing relationships between factors. In other words, this section focuses the logical relationships between latent variables which are divided into dependent and independent variables. The load factor is used to measure the relationship between the variables. The load factor of the independent latent variable equals λ, the load factor of the independent latent variable equals γ and the load factor of the dependent latent variable is equal to β . If the load factor is less than 0.3, the relationship is considered as weak and the relationship can be discarded. A load factor between 0.3 and 0.6 is acceptable but a load factor greater than 0.6 is considered highly favorable. Determining the load factors between the identified variables in the target organization is regarded as the objective.

Step 3: *Determining the correlation between the effective factors in the valuation of financing methods*

In this phase, the load factor loads are determined after drawing the initial model in LISREL software and taking the implementation from the initial model.

Step 4: *Designing the final model for explaining the valuation model*

Based on the output of LISREL software in this phase, the P value for the model is reported at zero. It is more favorable as P value moves towards zero since the statistical analysis is performed in the 95% confidence interval. In conclusion, the estimated model has favorable accuracy. The variables which have the interval limits mentioned in the second phase in the ESTIMATES mode are selected and the other variables are discarded. Finally, the path which leads us to the objective is selected as the dominant strategy over other strategies. The variables whose path coefficient is estimated less than 1.98 in the T-VALUES mode are rejected by the software. Thus, the variables which cause an effect in the relevant organization are identified by using the T-VALUES mode.

3.2 Demographic description of the participants in the quantitative part

Table 1 shows the demographic characteristics of the participants in the present study based on gender, age, education, and work experience. The participants of the quantitative part include the CEO, operations manager, financial manager, executive director, and information technology manager of Isfahan Regional Electricity Distribution Company along with university professors (N=130). A number of 97 participants were selected as the statistical sample using Morgan's table.

Table 1. Academic degree of the participants

Characteristics	Respondents	Frequency	Percentage
Academic degree	Associate degree and less	23	24
	Bachelor	45	46
	Master's degree	20	21
	PhD	9	9
	Total	97	100

[Downloaded from mail.ijaor.ir on 2026-11-28]

[DOI: 10.71885/ijorlu-2025-4-669]

4 Results

4.1 Qualitative results

The results of this section are classified based on the analysis of interviews in terms of open, axial, and selective coding until achieving a conceptual model for the valuation of financing methods. First, the primary categories of information regarding the studied valuation phenomenon are considered by dividing the information through the most effective factors as the main categories shown in Fig. 2 due to the open coding phase.

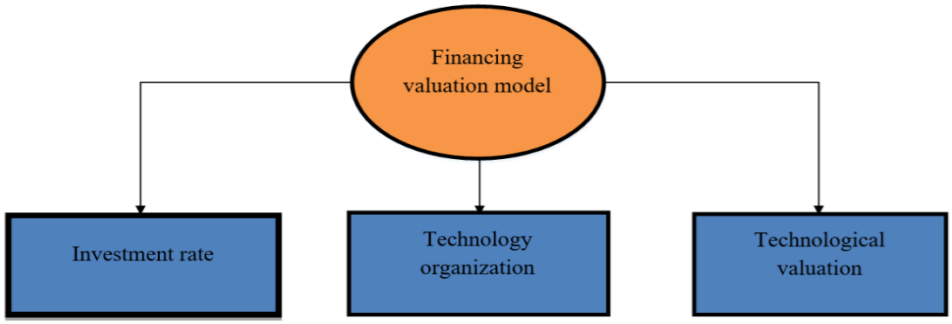

Fig 2. Open coding

Figure 2 shows that the financing valuation model is created based on the main categories of technological valuation, technology organization, and investment rate. Then, all of the interviews are analyzed in the form of drafted versions and note sheets from the interview sessions. Every line is examined, conceptualized, and categorized using the content analysis method and is continuously compared based on the similarity and connections between the codes. During the research process, numerous overlap is found among the extracted signs and key points. A number of 29 primary categories are identified and three main categories including nine sub-categories which are determined for valuation in the field of financing as shown in Figure 3.

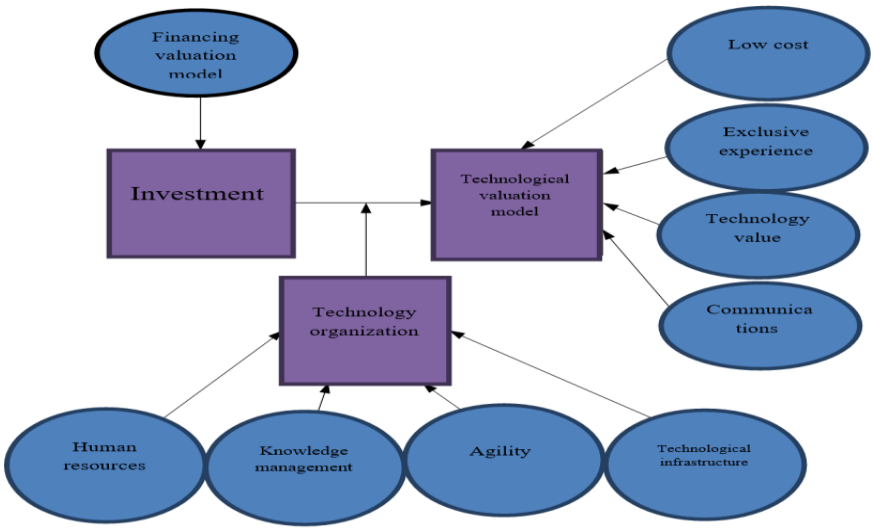

Fig 3. The axial model of the financing valuation

[Downloaded from mail.ijaor.ir on 2026-11-28]

[DOI: 10.71885/ijorlu-2025-4-669]

Finally, this section analyzes the interviews through their re-examination, the cases related to the similarities and differences of the extracted codes for the categories identified based on each question. Table 2 shows the degree of similarity and difference in the above-mentioned categories after asking each question according to the opinion of participants (CEO, operations manager, financial manager, executive director, information technology manager along with university professors).

Table 2. Similarity and difference in the identified categories for each question

Question No.	Related question	Frequency of observations		
1	What are the most important factors for valuation in the field of renewable energy financing?	Similar	Different	All items
	CEO	6	5	11
	Operations manager	5	6	11
	Financial manager	11	0	11
	Executive director	10	1	11
	Information technology manager	11	6	17
	University professors	5	11	16
2	What factors should be included in the valuation model?	Similar	Different	All items
	CEO	7	5	12
	Operations manager	10	12	22
	Financial manager	5	6	11
	Executive director	7	8	15
	Information technology manager	9	2	11
	University professors	11	0	11
3	What are the most effective factors for financing valuation in a technology organization?	Similar	Different	All items
	CEO	2	2	4
	Operations manager	4	۰	4
	Financial manager	1	2	۳
	Executive director	4	2	6
	Information technology manager	6	2	8
	University professors	9	1	10
4	What are the most significant investment models?	Similar	Different	All items
	CEO	10	4	14
	Operations manager	10	3	13
	Financial manager	12	4	16
	Executive director	9	3	12
	Information technology manager	10	2	12
	University professors	12	4	16

[Downloaded from mail.ijaor.ir on 2026-11-28]

[DOI: 10.71885/ijorlu-2025-4-669]

Tables 3, 4, and 5 show the percentage of effect by sub-criteria and main criteria using the calculation of CVR. These tables show the number of items that the participants consider the sub-criteria to be required for each main criterion. In addition, CVR value is calculated for each sub-criterion. Since there are 97 participants in this study, the sub-criterion is used in the conceptual model for valuation in the field of financing if the calculated value is higher than 0.25.

Table 3. CVR value of the recommended categories for the valuation model criterion

Category	Sub-criterion	Number of referrals among the participants						CVR	Status
		CEO	operations manager	Financial manager	Executive director	Information technology manager	University professors		
Valuation model	Low cost	2	2	1	1	1	1	80%	Acceptable
	Exclusive experience	1	2	1	1	1	1	80%	Acceptable
	Technology value	2	2	1	1	1	1	80%	Acceptable
	Communications	2	2	1	1	1	1	80%	Acceptable

Table 4. CVR value of the recommended categories for the technology organization criterion

Category	Sub-criterion	Number of referrals among the participants						CVR	Status
		CEO	operations manager	Financial manager	Executive director	Information technology manager	University professors		
Technology organization	Technological infrastructure	2	2	1	1	1	1	80%	Acceptable
	Agility	2	2	1	1	2	1	100%	Acceptable
	knowledge management	2	2	1	1	1	1	80%	Acceptable
	Human resources	2	2	1	1	2	1	100%	Acceptable

Table 5. CVR value of the recommended categories for the investment criterion

Category	Sub-criterion	Number of referrals among the participants						CVR	status
		CEO	operations manager	Financial manager	Executive director	Information technology manager	University professors		
Investment	New financing models	2	2	1	1	1	1	80%	Acceptable

Based on this questionnaire which makes the participants judge the necessity or non-necessity of categories, it shows that all of the sub-criteria considered for the categories have the required validity to be included in the research model. Thus, an initial conceptual model is designed in line with the main and subcategories identified in Table 6 for valuation in the field of financing using effective factors. In this model, the technology organization is

[Downloaded from mail.ijaor.ir on 2026-11-28]

[DOI: 10.71885/ijorlu-2025-4-669]

regarded as a mediating variable between the investment variable and the valuation model. Thus, Table 6 presents the results of selective coding. These results are extracted by raising the questionnaire designed for this study and completing it by the participants.

Table 6. Results of selective coding

Category No.	Main category	Extracted codes
1	Valuation model	• Low cost • Exclusive experience • Technology value • Communications
2	Technology organization	• Technological infrastructure • Agility • Knowledge management • Human resources
3	Investment	• New financing model

4. 2 Quantitative results

This section presents the inference of theoretical relationships between the extracted categories in the form of a model designed in LISREL software. Figure 4 displays the conceptual model for developing and explaining the valuation measurement model of financing methods based on the definition of the main categories and sub-categories in Table 7.

Table 7. Definition of observed and latent variables in the software

Financing valuation categories	Factors	Code
Technological valuation Var1	Low cost	G1
	Exclusive experience	G2
	Technology value	G3
	Communications	G4
Technology organization Var2	Human resources	I1
	Agility	I2
	Knowledge management	I3
	Technological infrastructure	I4
Investment rate Var3	New financing model	P1

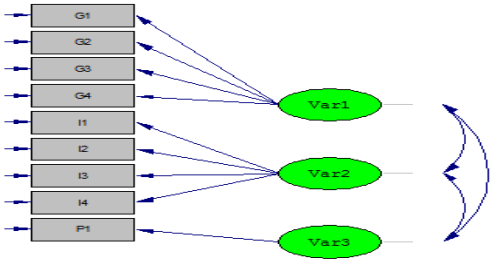

Fig. 4. The conceptual model designed in LISREL software

[Downloaded from mail.ijaor.ir on 2026-11-28]

[DOI: 10.71885/ijorlu-2025-4-669]

The load factors of the relationships defined in the final model are determined by running the software under the initial model. The presence or absence of the considered factors in the final model can be determined through the analysis of load factors. Figure 5 shows the estimated load factors of the relationships between technological valuation, technology organization, and investment rate, as well as their sub-criteria to explain a model for measuring the valuation model of financing methods in technology organizations. The higher the estimated load factors, the stronger the relationship between that category and its sub-criteria.

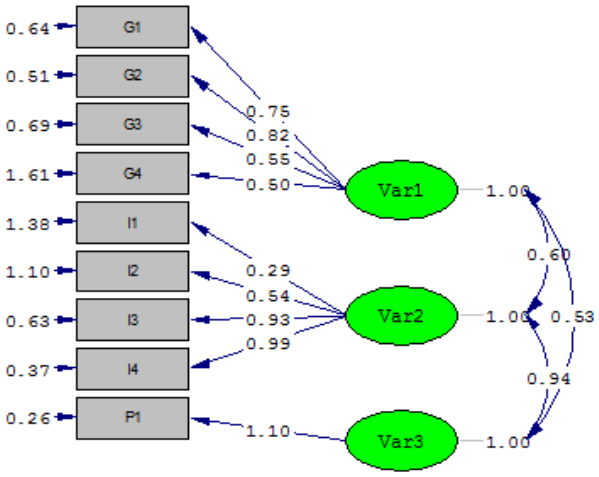

Fig 5. The estimated model of load factors

Figure 6 shows the standard confirmatory load factors in addition to the estimated load factors. In this case, all values of load factors for defined relationships are placed on the scale of zero and one. The relationship between the category and its sub-criteria is stronger as the value of load factors is closer to one. A load factor less than 0.3 is considered as a weak relationship, between 0.3 and 0.5 is a good relationship, and more than 0.5 is a very good relationship. Thus, the relationship between technology organization and human resources is insignificant with an impact factor of 0.24. As a result, this sub-criterion can be excluded from the model.

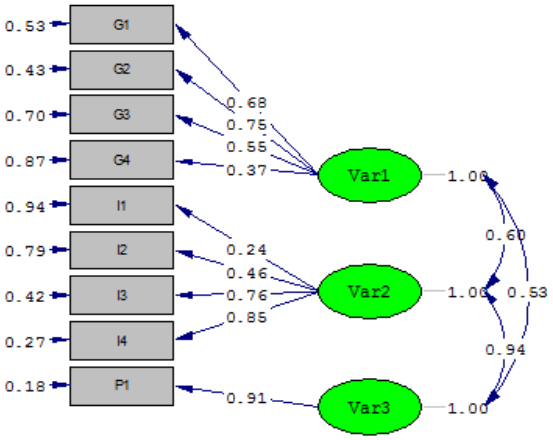

Fig 6. The standard model of load factors

[Downloaded from mail.ijaor.ir on 2026-11-28]

[DOI: 10.71885/ijorlu-2025-4-669]

Table 8 presents the final decision regarding the presence or absence of sub-criteria. Table 9 shows the type of relationship of each sub-criterion with its main criteria according to the classification in terms of standard load factor to realize the valuation for financing methods in renewable energies.

Table 8. Status of categories in the final model

Financing valuation categories	Factors	Code	Status	
			Presence	Absence
Technological valuationVar1	Low cost	G1	*	
	Exclusive experience	G2	*	
	Technology value	G3	*	
	Communication	G4	*	
Technology organizationVar2	Human resources	I1		*
	Agility	I2	*	
	Knowledge management	I3	*	
	Technological infrastructure	I4	*	
Investment rate Var3	New financing model	P1	*	

Table 9. Relationship between sub-categories and main categories

Financing valuation categories	Factors	Code	Load factor value	Relationship		
				Weak	Good	Very good
Technological valuationVar1	Low cost	G1	0.68			*
	Exclusive experience	G2	0.75			*
	Technology value	G3	0.55			*
	Communication	G4	0.37		*	
Technology organizationVar2	Human resources	I1	0.24	*		
	Agility	I2	0.46	*	*	
	Knowledge management	I3	0.76	*		*
	Technological infrastructure	I4	0.85	*		*
Investment rate Var3	New financing model	P1	0.91	*		*

As shown in Table 9, except for the relationship between human resources and technology organization which is weak and should be discarded, other categories have good and very good relationships with their main categories in the financing valuation model.

4.3 Validation of the proposed model

Table 10 presents the results of model validation based on P-value, RMSEA, and r$\frac{\text{Chi-square}}{\text{df}}$. The model is in a very good condition in terms of P value since the calculation results are

[Downloaded from mail.ijaor.ir on 2026-11-28]

[DOI: 10.71885/ijorlu-2025-4-669]

more reliable as P-value is closer to zero. The calculated RMSEA value is less than 0.5, so this value is reported to be optimal for the model. Finally, the value of $\frac{\text{Chi-square}}{\text{df}}$ should be reported to be higher than 5. Regarding the calculated value of 17.74, the model is in a very good condition in terms of this value. Therefore, the model validity is measured by checking the specified values for the validity of the model since the results are all in an optimal status. The results obtained according to this model can be used for evaluating the valuation model of financing methods in the deployment of renewable technologies by considering technological valuation, technology organization, and investment.

Table 10. Calculated values of the proposed model

Statistics	P-value	RMSEA	Df	Chi-square	$\frac{\text{Chi - square}}{\text{df}}$
Value	0.000	0.237	74	1313.39	17.74

5 Discussion and conclusion

The present study proposed a model by using experts' opinions and reviewing the subject in the field of technology valuation selection for analyzing financial decisions in the field of financing and investment in the solar energy industry. A qualitative model based on the grounded theory was followed to design the model. Considering all of the above-mentioned factors in this study, the technology valuation model for the analysis of financial decisions in the field of financing and investment in the solar energy industry was designed according to experts' opinions in terms of three main categories (valuation model, technology organization and investment) and nine sub-categories (low cost, exclusive experience, technology value, communication, technological infrastructure, agility, knowledge management, human resources, new financing model). To ensure whether the factors are selected correctly or not, a content validity analysis was conducted for each category. Based on the results, all of the categories have the required sufficiency for being included in the valuation model. Finally, the relationships between the factors were modeled in LISREL software using the structural equation model to determine the effect of each factor on each other and its main factors. Based on the obtained results, the relationship between human resources and technology organization in the financing valuation model was insignificant with an impact factor of 0.24. Thus, this criterion could not be included in the financing valuation model. However, the relationship of other factors with their main criteria in the valuation model of financing was significant. Finally, the validity of the model was evaluated by conducting statistical tests. The model is in a very good condition in terms of the amount of considered statistics based on the results obtained from the measurement of the required statistics for the model validity. The renewable energy sector is characterized by rapidly changing market conditions, including fluctuations in technology costs, regulatory frameworks, and investor sentiment. These dynamic factors can impact the relevance and applicability of the valuation model over time, necessitating continuous updates and adjustments. The model may not fully account for regional differences in regulatory environments, economic conditions, and resource availability. Financing methods that are effective in one geographic area may not be suitable or applicable in another, limiting the model's generalizability across diverse contexts. To facilitate analysis, the model relies on certain assumptions and simplifications regarding market behavior, risk factors, and stakeholder motivations. These assumptions may not

[Downloaded from mail.ijaor.ir on 2026-11-28]

[DOI: 10.71885/ijorlu-2025-4-669]

always reflect real-world complexities, potentially affecting the accuracy of the valuation results. While the valuation model provides a structured framework for assessing technology financing methods in renewable energy deployment, it is essential to recognize its limitations. Acknowledging these constraints can guide users in interpreting the results and applying the model effectively, while also highlighting areas for future research and refinement.
For further studies, it is suggested that the significance of the criteria be conducted as the weight of parameters using multi-criteria decision-making methods or a prioritization of the factors using the hierarchical method.

References

1. Aquila, G., Rocha, L. C. S., Junior, P. R., Junior, J. Y. S., Lima, J. D. S. B., & Balestrassi, P. P. (2020). Economic planning of wind farms from a NBI-RSM-DEA multiobjective programming. Renewable Energy, 158, 628-641.
2. Bishop, C. J, (2016), the challenge of intellectual property assets, northwesternjornal of technology and intellectual property.
3. Dusek, V. (2023). The Definition of Technology. In Technology Ethics (pp. 6-13). Routledge.
4. Gai, K., Qiu, M., Tao, L., & Zhu, Y. (2016). Intrusion detection techniques for mobile cloud computing in heterogeneous 5G. Security and Communication Networks, 9(16), 3049-3058
5. Hamid, A. K., & Ansari, S. (2022, February). Optimal Placement of Grid-Connected Wind Farms Based on Artificial Intelligence Techniques. In 2022 Advances in Science and Engineering Technology International Conferences (ASET) (pp. 1-8). IEEE.
6. Higgins, S., & Stathopoulos, T. (2021). Application of artificial intelligence to urban wind energy. Building and Environment, 197, 107848.
7. Kim, K. T., Lee, D. J., & Park, S. J. (2016).Evaluation of R&D investments in wind power in Korea using real option. Renew Sustain Energy Rev, 40, 335-47.
8. Lee, T., & Kim, H.-W. (2015). an exploratory study on fintech industry in Korea: crowd funding case. Paper presented at the 2nd International conference on innovative engineering technologies (ICIET'2015). Bangkok
9. Leong, K., & Sung, A. (2018). Fintech (Financial Technology): What is it and how to use technologies to create business value in fintech way? International Journal of Innovation, Management and Technology, 9(2), 74-78.
10. Lipu, M. H., Miah, M. S., Hannan, M. A., Hussain, A., Sarker, M. R., Ayob, A., & Mahmud, M. S. (2021). Artificial Intelligence Based Hybrid Forecasting Approaches for Wind Power Generation: Progress, Challenges and Prospects. IEEE Access, 9, 102460-102489.
11. M.A. Chen, Q. Wu, B. Yang (2019), How valuable is FinTech innovation? The Review of Financial Studies, 32 (5), pp. 2062-2106.
12. Maindargi, Varsha (2020). Human Resource Accounting: Interests and Human Resource Costing & Accounting, 14 (3), 178-195.
13. Mortezazadeh, M., Zou, J., Hosseini, M., Yang, S., & Wang, L. (2022). Estimating Urban Wind Speeds and Wind Power Potentials Based on Machine Learning with City Fast Fluid Dynamics Training Data. Atmosphere, 13(2), 214.
14. Ocean Tomo intellectual capital equity. (2020). intangible asset market value study, Retrieved from: https://www.oceantomo.com.
15. Ozkan, N., Cakan, S., & Kayacan, M. (2017). Intellectual capital and financial performance: A study of the Turkish Banking Sector. Borsa Istanbul Review, 17(3), 190-198.
16. P. Schueffel (2016), taming the beast: A scientific definition of fintech. Journal of Innovation Management, 4 (4), 32-54.
17. Souza, J. C. F., Souza, J. G. D. M., & Hao, P. Y. (2021). Are fintechs worth investing? Case study for startup using real option theory. International Journal of Development Research, 11(04), 45999-46007.
18. Thakor, A. V. (2020). Fintech and banking: What do we know?.Journal of Financial Intermediation, 41, 100833.
19. Valdivia, M., Galan, J. L., Laffarga, J., & Ramos, J. L. (2020). A research and technology valuation model for decision analysis in the environmental and renewable energy sectors. Renewable and Sustainable Energy Reviews, 122, 109726.

[Downloaded from mail.ijaor.ir on 2026-11-28]

[DOI: 10.71885/ijorlu-2025-4-669]

20. Wojcik, D. (2021). Financial geography I: Exploring FinTech–maps and concepts. Progress in Human Geography, 45(3), 566-576.
21. Xu, Q., & Zhong, M. (2023). The impact of income inequity on energy consumption: The moderating role of digitalization. Journal of Environmental Management, 325, 116464.
22. Ye, Y., Chen, S., & Li, C. (2022). Financial technology as a driver of poverty alleviation in China: Evidence from an innovative regression approach. Journal of Innovation & Knowledge, 7(1), 100164.
23. Zakari, Y. (2022). Addressing impact of climate change on wind and solar energy infrastructures: the case of India (No. THESIS). EPFL.
24. Zubair, S., Kabir, R., & Huang, X. (2020). Does the financial crisis change the effect of financing on investment? Evidence from private SMEs. Journal of Business Research, 110, 456-463.

[Downloaded from mail.ijaor.ir on 2026-11-28]

[DOI: 10.71885/ijorlu-2025-4-669]